AB-PC-06 TWIST-LOCK
ELETRONIC TYPE PHOTO CONTROL

The photocontroller can turn on and off light automatically according to ambient light; Our product is widely used on street lighting, garden lighting, area lighting, other outdoor lighting etc.
This product is designed with electronic circuits with sensor of photodiode and a surge arrester (MOV) is provided. Its quicker response with time delay of 3-10 seconds offers easy to test feature. This model photocontrol can provide a wide voltage range for customer appliations under almost power supplies.



TECHNICAL SPECIFICATION

Standard	ANSI C136.10
Certificate	CE
Rated Volts	110-277VAC; 220-240VAC
Rated Load	1000W/1800VA
Operating Temperature	-40℃ to +70℃
Power Consumption	1.5VA
On/Off Level	10-16 lux On, <40Lux Off
Frequency	50/60Hz
Life Span	>10000 ON/OFF Operations
Ingress Protection	IP66/IP67

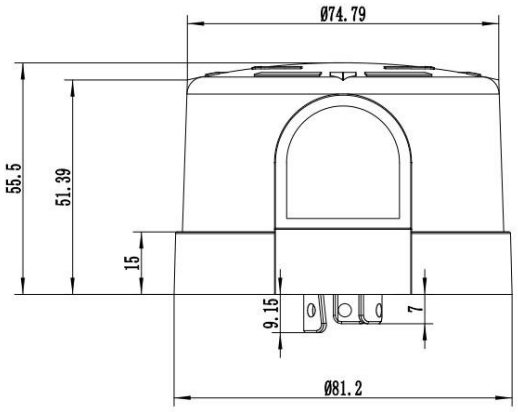

Web. ability-tec.com.sa Mob. +966 55 491 1155 Mob. +966 53 641 2996 Mail. S@ability-tec.com.sa

AB-PC-BASE PHOTOCONTROL RECEPTACLE

TECHNICAL SPECIFICATION

Standard	ANSI C136.10 & UL773
Cable	UL1015 14AWG/16AWG
Rated Volts	480V(105-480V)
Frequency	50-60 Hz
Rated Load	15A/ 1000W / 1800VA
Operating Temperature	-40℃ to +70℃
Related Humidity	99%
Insulation	2500V / 60Hz /1min
Housing	Bakelite
Accessory	Silicon Gasket



PRODUCT DESCRIPTION:

OPT301 series dusk to dawn automatic Light Control Nema 3 Pin Photocontrol Receptacle are intended to be pre-mounted onto those lanterns designed to fit an ANSI C136.10-1996 twist-lock photocontrol.

WIRING DIAGRAM

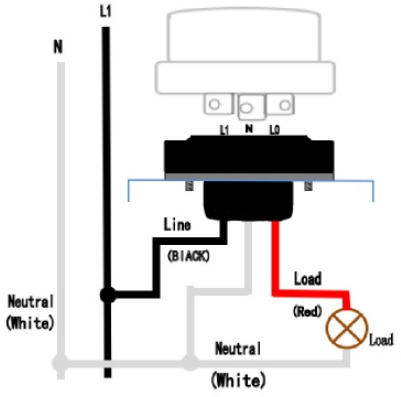

DIMENSION

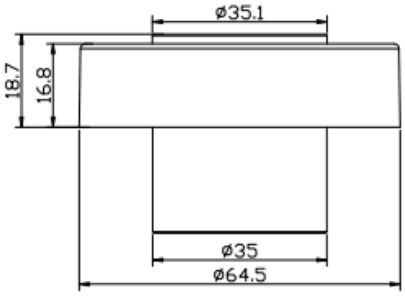

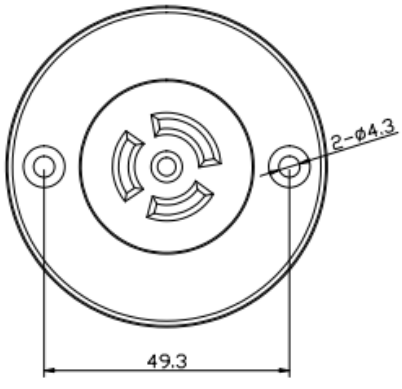

Ordering Information

MODEL#	WIRE SIZE	WIRE LENGTH
OPT301	W14:UL1015 14AWG W16:UL1015 16AWG	L20:20CM L30:30CM

ORDER PART NO.:OPT301-W14-L30

The MOUNTING RECEPTACLE offers multiple configuration options.
If you do not see your required configuration, please contact us