LBC Series Battery Charger Instructions

Ver1.2 Date: 2016/03/22



Version History

Date	Version	Content
2014-05-19	1.0	Start Publishing
2015-03-12	1.1	Add BOOST, Charging Failure Alarm function
2016-03-22	1.2	Modify details

1. Overview

LBC series Battery Charger is a charger which using latest switch power programs, and specifically for the charging characteristics of lead-acid batteries designed for engine start, suitable for lead-acid batteries of long-term supplemental charge (float), you can select the appropriate one according to the selection table.

Order Type Sample				
	LBC	24	05	B
Charger Series				
Output Voltage:	24: 24V 12: 12V			
Output Current:	03: 3A (2403) 05: 5A (2405) 06: 6A (1206) 08: 8A (1208)			
Function:	No: No Special Function B : With Mains Failure Alarm and BOOST output function			

2. Features

- Take Switch Power Structure, wide range of AC input voltage, small volume, light weight, high efficience.
- Using Multistage Charging Method (constant voltage, constant current, trickle float, full stop) automatic charging, fully charged according to the battery charging characteristics to prevent lead-acid battery overcharge, can maximize battery life.
- With the flow, short circuit, reverse polarity protection.
- With Charging Failure Alarm Output Function (Passive Relay Contact), more convenient and safe.
- Charging voltage and current values can be adjusted at the scene by the potentiometer.
- BOOST boost function, short BOOST port can boost 1.5 V of output voltage, with compensation for rechargeable dissatisfaction in the winter, and better for the old battery.
- Suitable for 24V battery pack, rated charging current is 5A.
- Charging status LED indication: Power Indication (green), Charging Indication (red), filled with lights off.

3. Charging Principle

LBC2405/LBC2403

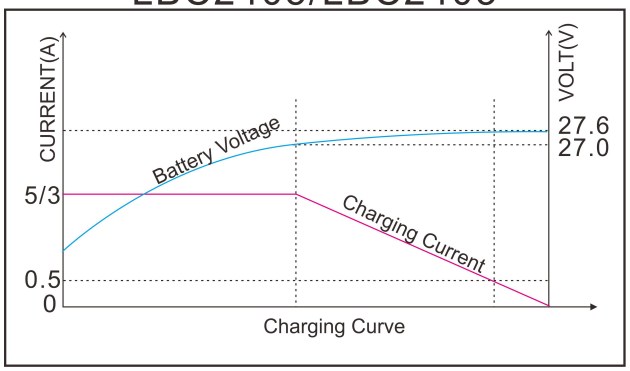

LBC1208/LBC1206

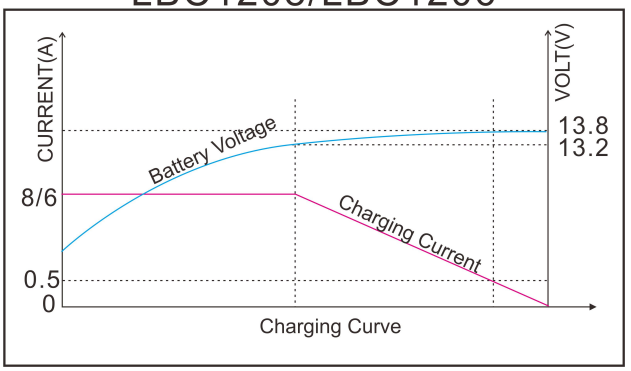

Use 2 stages of charging method according to the battery charger characteristics. First stage is “Constant Current Mode”, namely before the battery terminal voltage lower than preset value, charging is for the constant current charging; Second sage is “Float Mode”, means when terminal voltage of battery charger is higher than the preset value, the charging current decrease with battery charger terminal voltage rising, then charging into a float charge.

When charging current is less than 0.5 A, terminal voltage is gradually increased to reach a preset constant value, the battery has been basically full (charging indicator light off), then the charging current is only offset the battery self-discharge, and harmless even long charging time, it namely charger can maintain full status, and ensure the life time of battery.

4. Specifications

Category	Project	Specification			
Input Characteristic	nominal AC input voltage range	AC (100~240)V			
	Max. AC input voltage range	AC (95~280)V			
	AC frequency	50 Hz/60 Hz			
	No-load power consumption	<3 W			
	efficiency	AC 110 V		AC 220 V	
		>82%		>86%	
	Max. input active power	LBC 2405	LBC 2403	LBC 1206	LBC 1208
		168 W	97 W	90 W	118 W
	Max. Input current	2.9 A	1.8 A	1 A	1.5 A
Output Characteristic	No-load output voltage	27.6 V，error ±1%		13.8 V, error ±1%	
	rated charging current	5 A，error ±2%	3 A,error ±2%	6 A,error ±2%	8 A,error ±2%
	rated output	135 W	85 W	83 W	111 W
Alarm Output	relay contact	0.5 A/250 VAC(Only useful with B suffixes, such as LBC2405B)			
Insulating Property	insulating resistor	Input and output、input and shell both read DC500V 1min RL ≧500MΩ			
	insulating voltage	Input and output、input and shell both read AC1500V 50Hz 1min leak current IL ≦ 3.5 mA			
Working Situation	working temperature	(-30~55)°C			
	store humidity	(-40~85)°C			
	working humidity	20% RH~ 93% RH(no condensation)			
	storage humidity	10% RH~ 95% RH(no condensation)			
	weight	0.7 kg			
Configuration	size	133 mm× 117 mm× 53 mm (length× width× height)			

5. Operating Structions

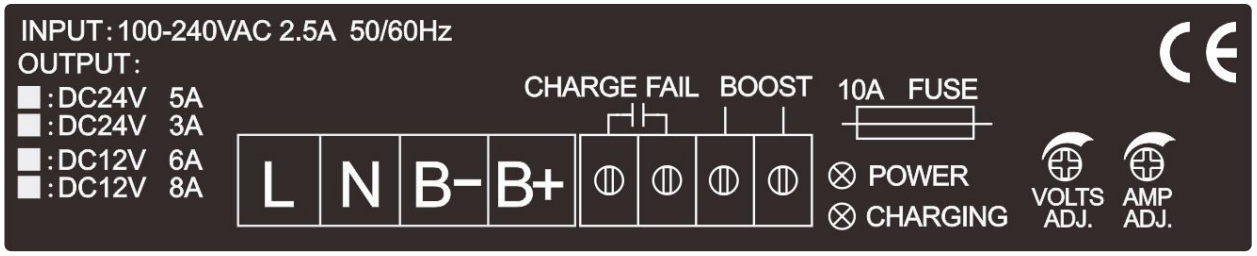

5.1. L, N connect to AC 100-240 V, using BVR1mm² multi-strand copper wire.

5.2. B+ connect to battery, B- connect to storage battery, using BVR1.5mm² multi-strand copper wire.

5.3. CHARGE FAIL Charging Failure Output Terminal.

5.4. BOOST boost port, short BOOST port can boost the output voltage 1.5 V, also filled with battery in winter.Suggested Use: short-circuit this terminal when temperature is below 10℃ and battery aging.

5.5. POWER: power supply indicator, illuminated when the charger is operating normally

5.6. CHARGING: charging indicator, illuminated when charging current exceeds 0.5 A while extinguished when charging current has fallen below 0.5 A.

5.7. VOLT: charging voltage regulator-potentiometer, Adjusting the voltage at the scene, it need to disconnect the battery from the charger, while measuring the output voltage of the charger, and adjusting the voltage potentiometer (VOLT), until transferred to a suitable voltage.

✧ *Suggestion: 12 V battery float voltage is at 13.8 V, 24 V battery float voltage of 27.6 V. Factory is a according to the adjustment and calibration, non-professional workers do not adjust at will.*

5.8. AMP: charging current regulator-potentiometer, Output connected battery, take charging current measurement when 24 V battery pack is not higher than the charging voltage 22.0 V; 12 V battery charging voltage is not higher than 11.0 V, via adjusting the current potentiometer to set the appropriate charging current

5.9. FUSE: Output fuse; Rated current: 10 A. If connected in the wrong way, the fuse will be burnt out and then voltage free. In this case connect cables correctly, replace the fuse and the system will continue to operate normally

5.10. Insurance Replacement Steps:

Use a flat screwdriver to harder press into it, while counter-clockwise back to tighten it, then pull out the knob part.

Change new insurance after extracting it, and insert it into the fuse holder inside, then use a flathead screwdriver to harder press into it, meanwhile clockwise twist it.

✧ *Tips: Improper operation or excessive force most likely to be damage fuse holder.*

✧ *Mark: 1) This charger is connected to the internal output diode and current-limiting circuit, charger and charging generators in parallel on the engine used is not required when starting off the charger.*

2)When applied to the generator, cause of large charging current, it will cause a pressure drop in the charge line. it is recommended that a separate charging cable connected to the battery terminals to avoid affecting the sensor sampling accuracy.

6. Outline and Installing Dimension

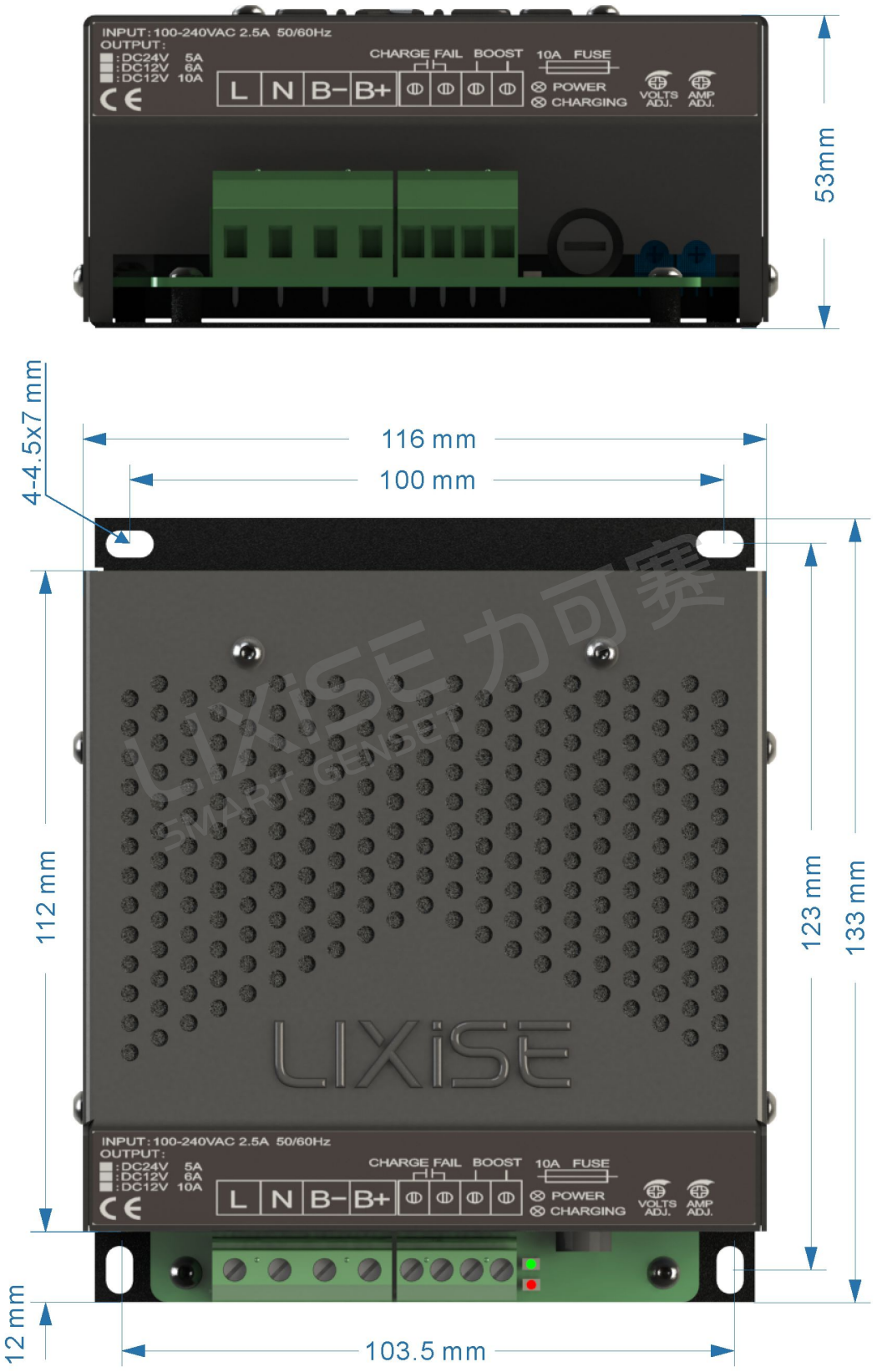

7. Application of Schematic Diagram

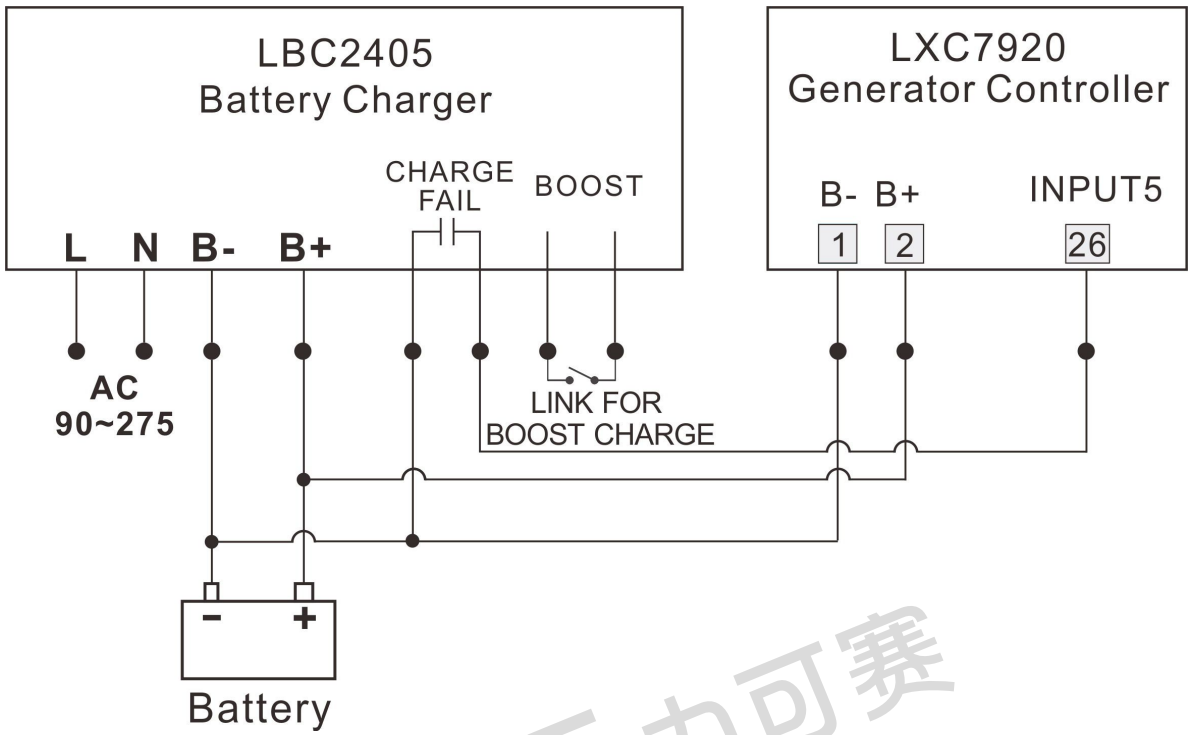

LIXISE 力可赛 SMART GENSET